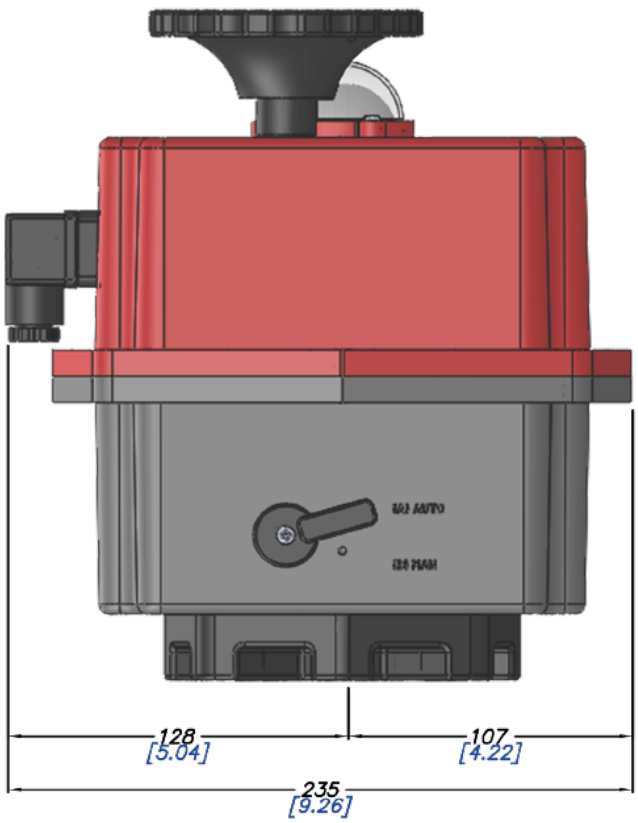
128
[5.04]
107
[4.22]
235
[9.26]

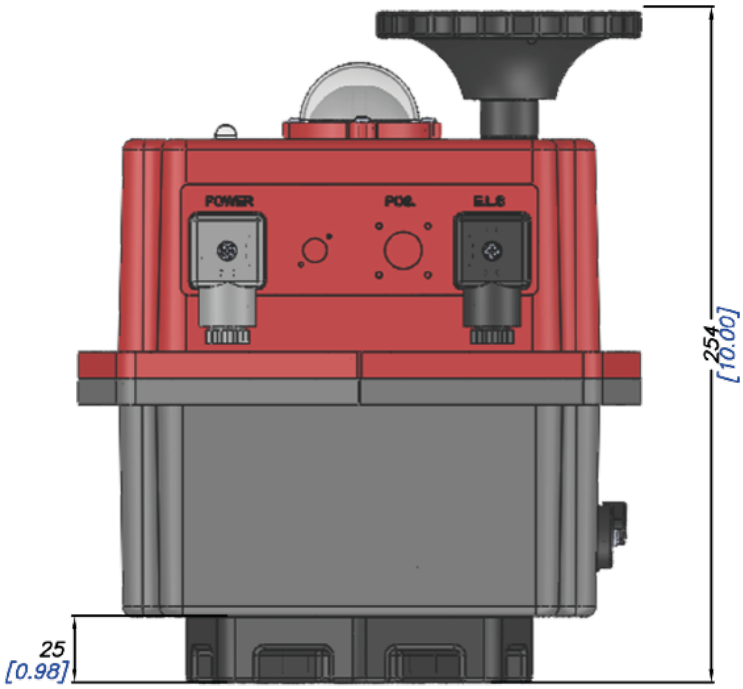
POWER
POS.
ELS
254
[10.00]
25
[0.98]

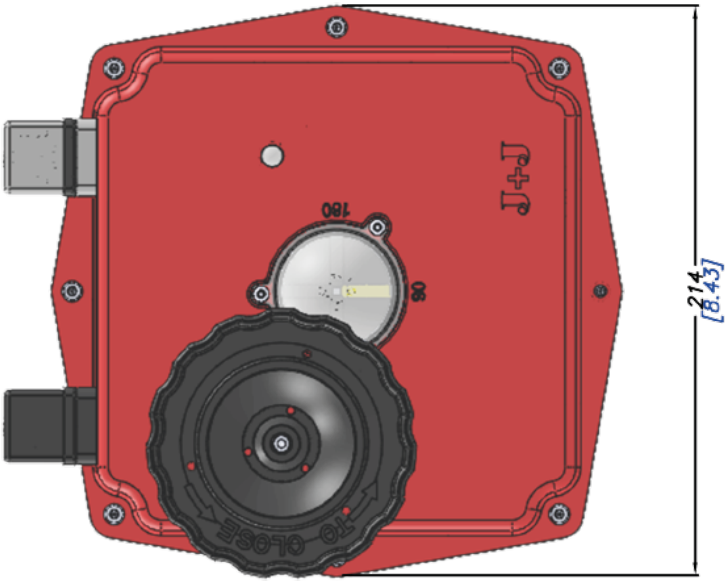
180
90
TO CLOSE
214
[8.43]

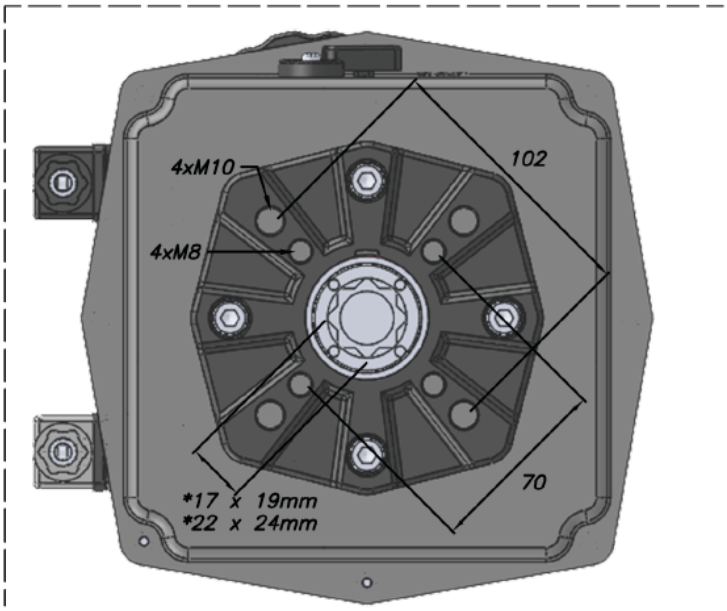
4xM10
4xM8
102
70
*17 x 19mm
*22 x 24mm