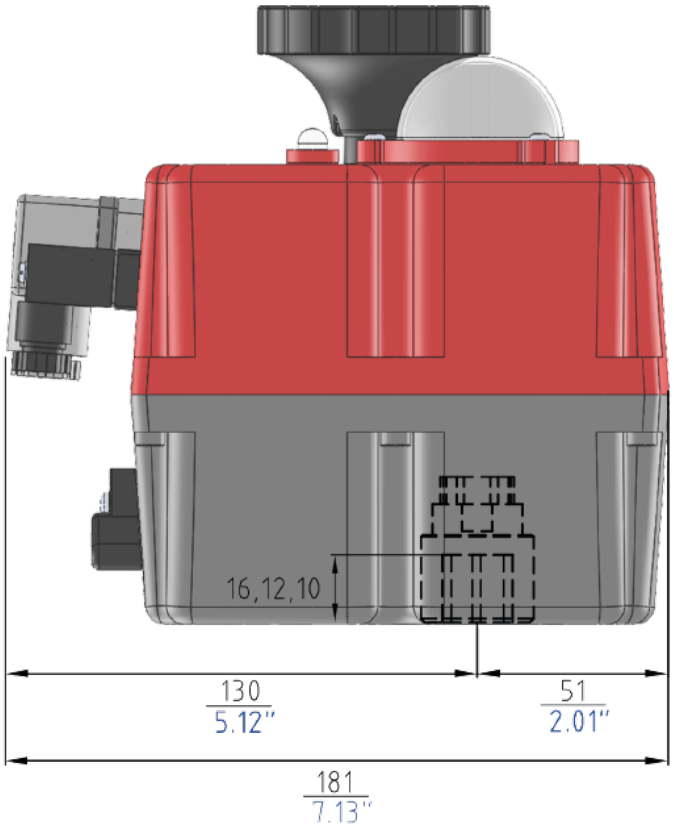
16,12,10
130
5.12"
51
2.01"
181
7.13"

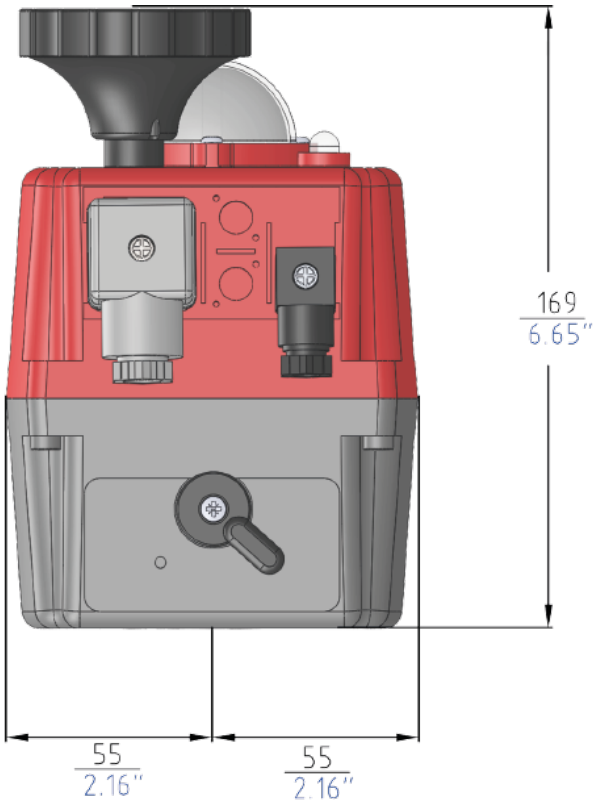
169
6.65"
55
2.16"
55
2.16"

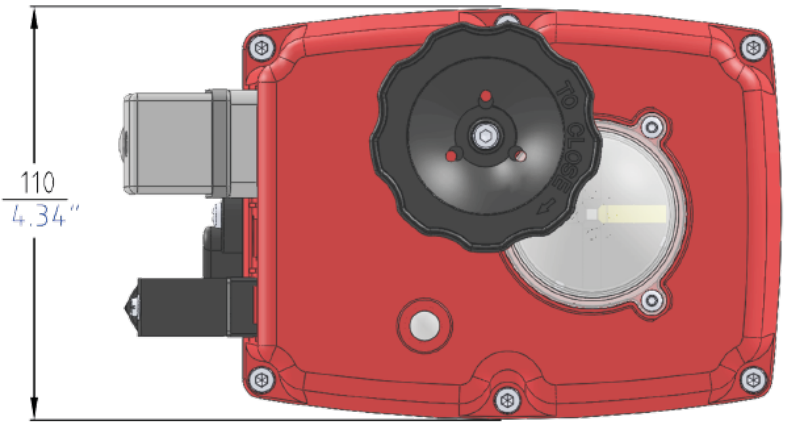
110
4.34"
TO CLOSE

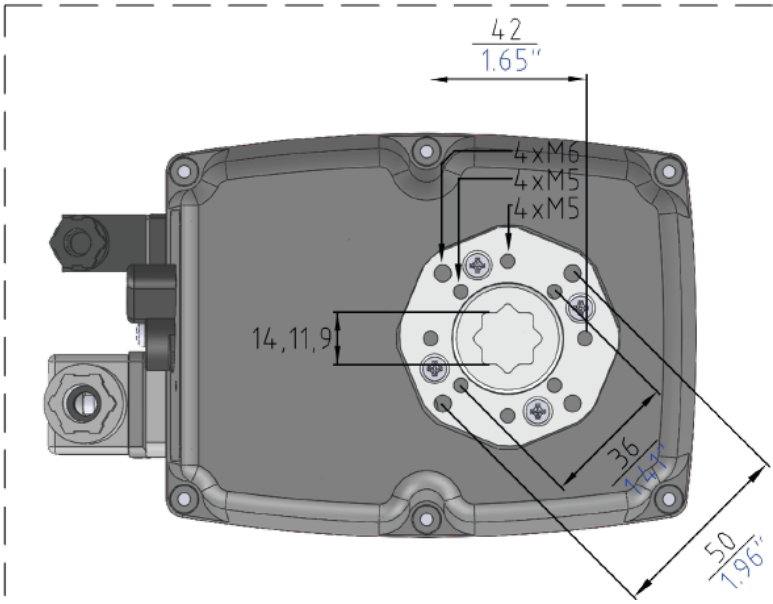
42
1.65"
4xM6
4xM5
4xM5
14,11,9
36
1.41"
50
1.96"