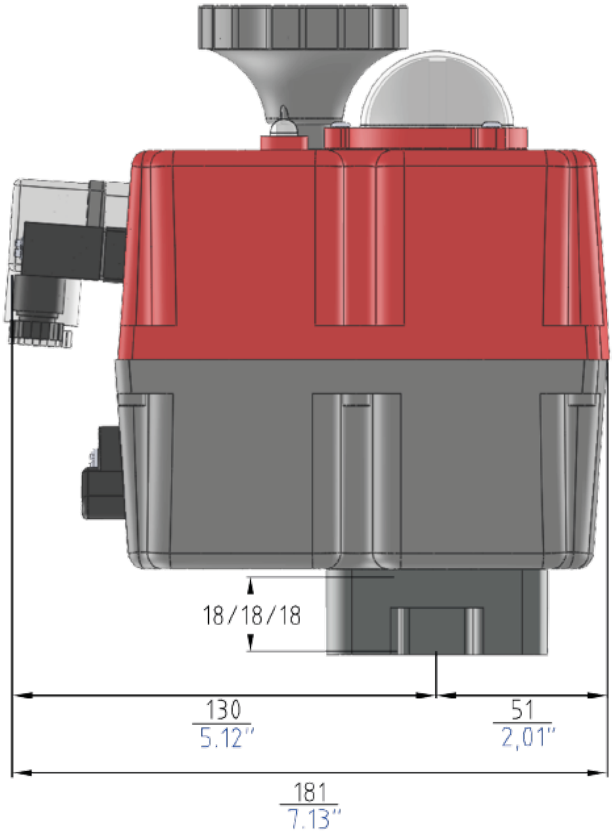
18/18/18
130
5.12"
51
2,01"
181
7.13"

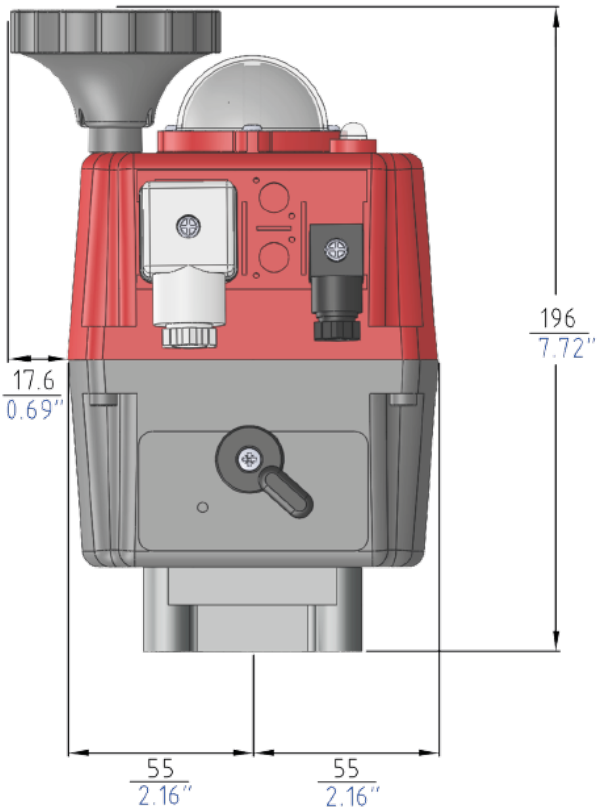
17.6
0.69"
196
7.72"
55
2.16"
55
2.16"

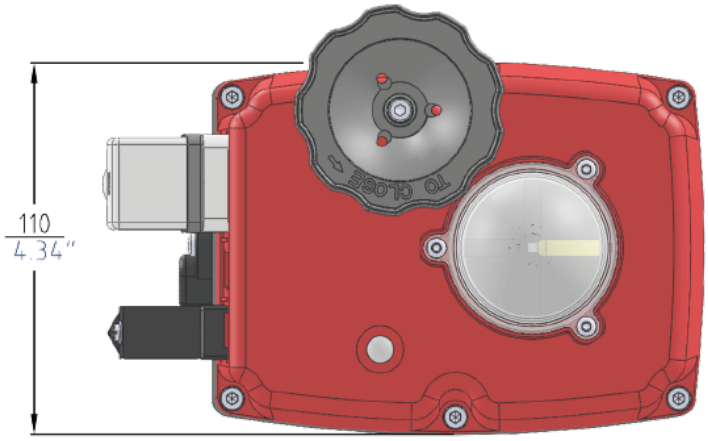
110
4.34"
TO CLOSE

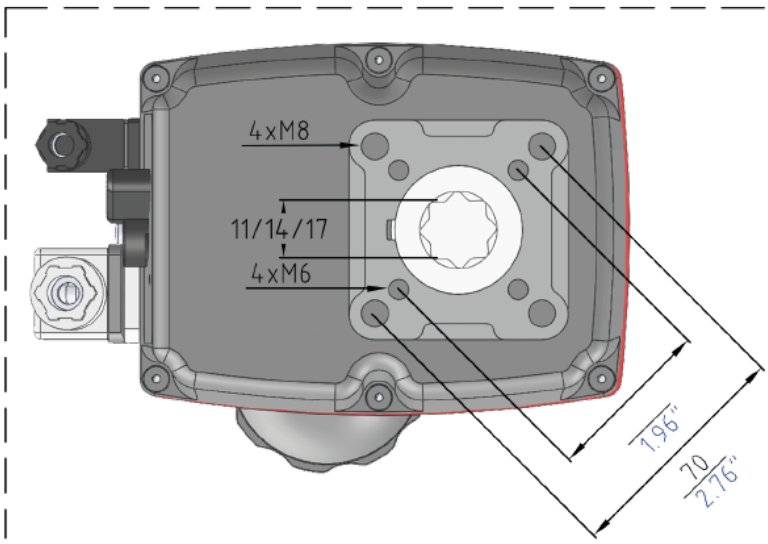
4xM8
11/14/17
4xM6
1.96"
70
2.76"